3SE2, 3SE3 Position Switches with Separate Actuator

Molded-plastic enclosures, 31 mm

Configuration

Operation, operating speed and travel of actuators

Actuator	Operation by a separate actuator	Contact blocks	Nominal travel		Minimum force required in operating direction on retraction
	v_{max} Max. operating speed → Direction of operation Radius actuation: for all directions of approach	Terminal designation according to EN 50013	Contact closed Contact open Actuator in actuator head; NC is closed		
Separate actuators		***Slow-action contacts***	Lateral actuation	For front-end operation	
	3SE2 200–.XX03 **3SE2 200–.XX04**				
Lateral actuation v_{max} = 1.5 m/s	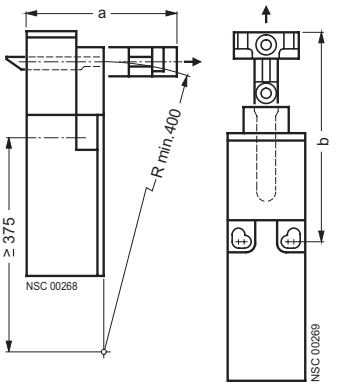	**1 NO + 1 NC** 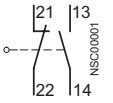 Ident. No. **11**	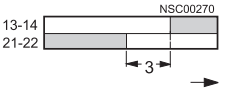	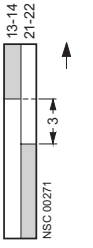	10 N
Axial and front-end actuation v_{max} = 1 m/s		**2 NC** 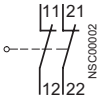 Ident. No. **02**			

Actuator	a	b
Short	42 ... 45	66.5 ... 69
Long	62 ... 65	86.5 ... 89

Axial and lateral actuation (4 × 90°)	**3SE3 200–.XX13** Vertical actuation 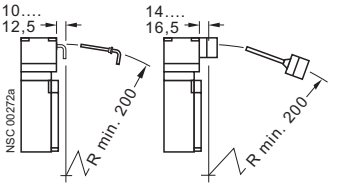	**1 NO 1 NC** 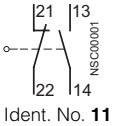 Ident. No. **11** **2 NC** 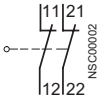 Ident. No. **02**	10 N
	Horizontal actuation 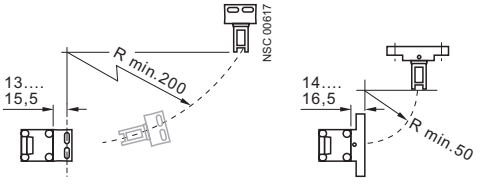		

Dimensional drawings

3SE2 200-.XX03, lateral actuation

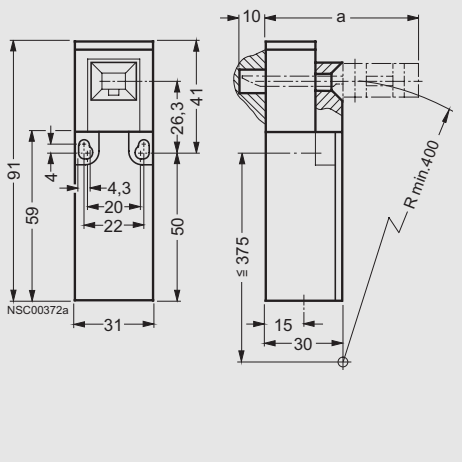

3SE2 200-.XX04, front-end actuation

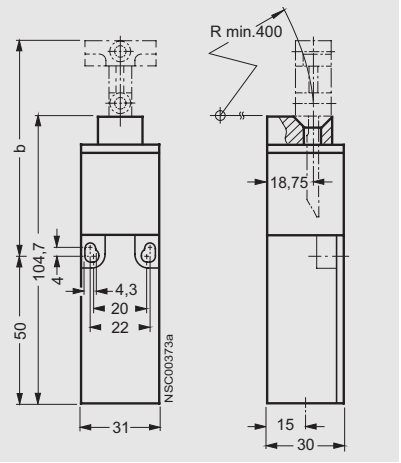

Permissible center offset of actuator to position switch: vertical and horizontal ±1 mm

Actuators	a	b
Short	42 ... 45	66.5 ... 69
Long	62 ... 65	86.5 ... 89

Radius actuation:
For all radii ≥ 50 mm,
lateral and front-end actuation

3SX3 196 short actuator

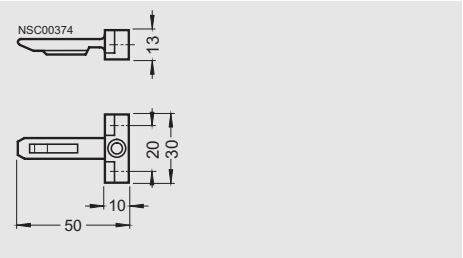

3SX3 195 long actuator

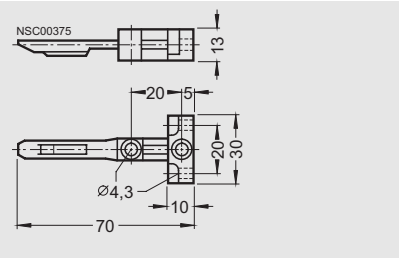

3SE3 200-.XX13, 5 directions of approach

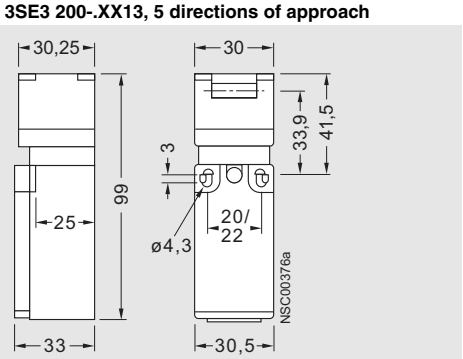

Radius actuation:
For all radii ≥ 50 mm,
lateral and front-end actuation

3SX3 220 standard actuator

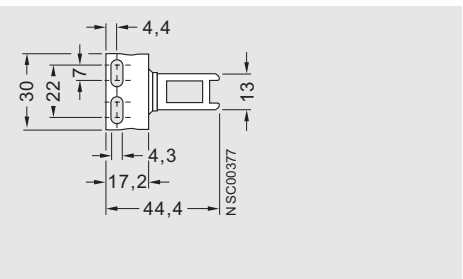

3SX3 221 actuator for transverse fixing

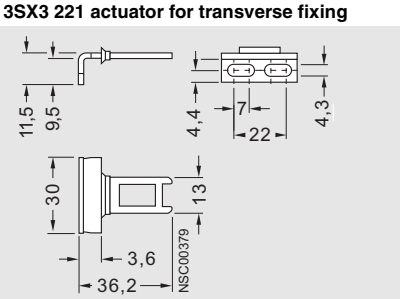
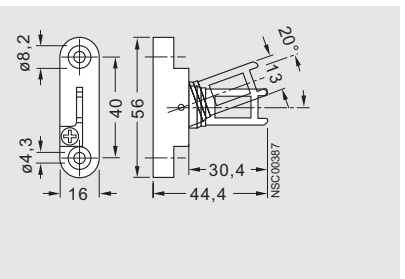
3SX3 254 universal radius actuator