SIPART DR21 Controllers

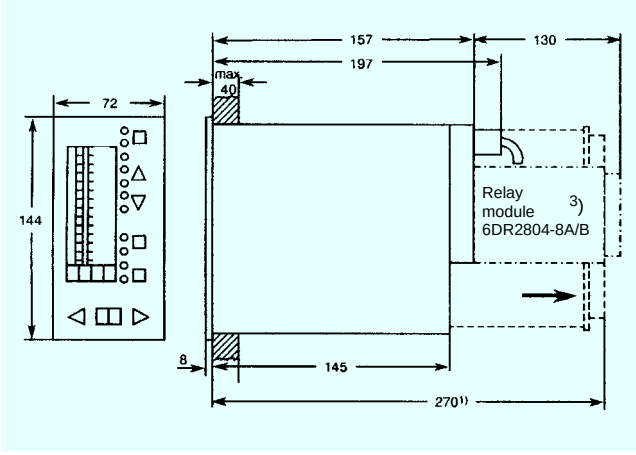

Fig. 1 SIPART DR21 controller, dimensions in mm

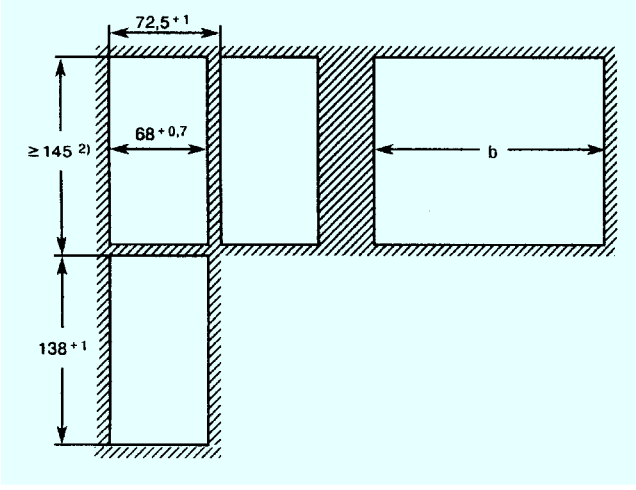

No. of devices	Cut-out width
2	140 + 1
3	212 + 1
4	284 + 1
.	.
.	.
10	716 + 1

Fig. 2 Panel cut-outs, dimensions in mm

1) Space required to change motherboard and module.

2) Observe ambient temperature when stacking with no intermediate spacing.

3) A relay module with 2 or 4 relays (6DR2804-8A/-8B) can be snapped onto the rear of the controller. This will increase the mounting depth by 130 mm.