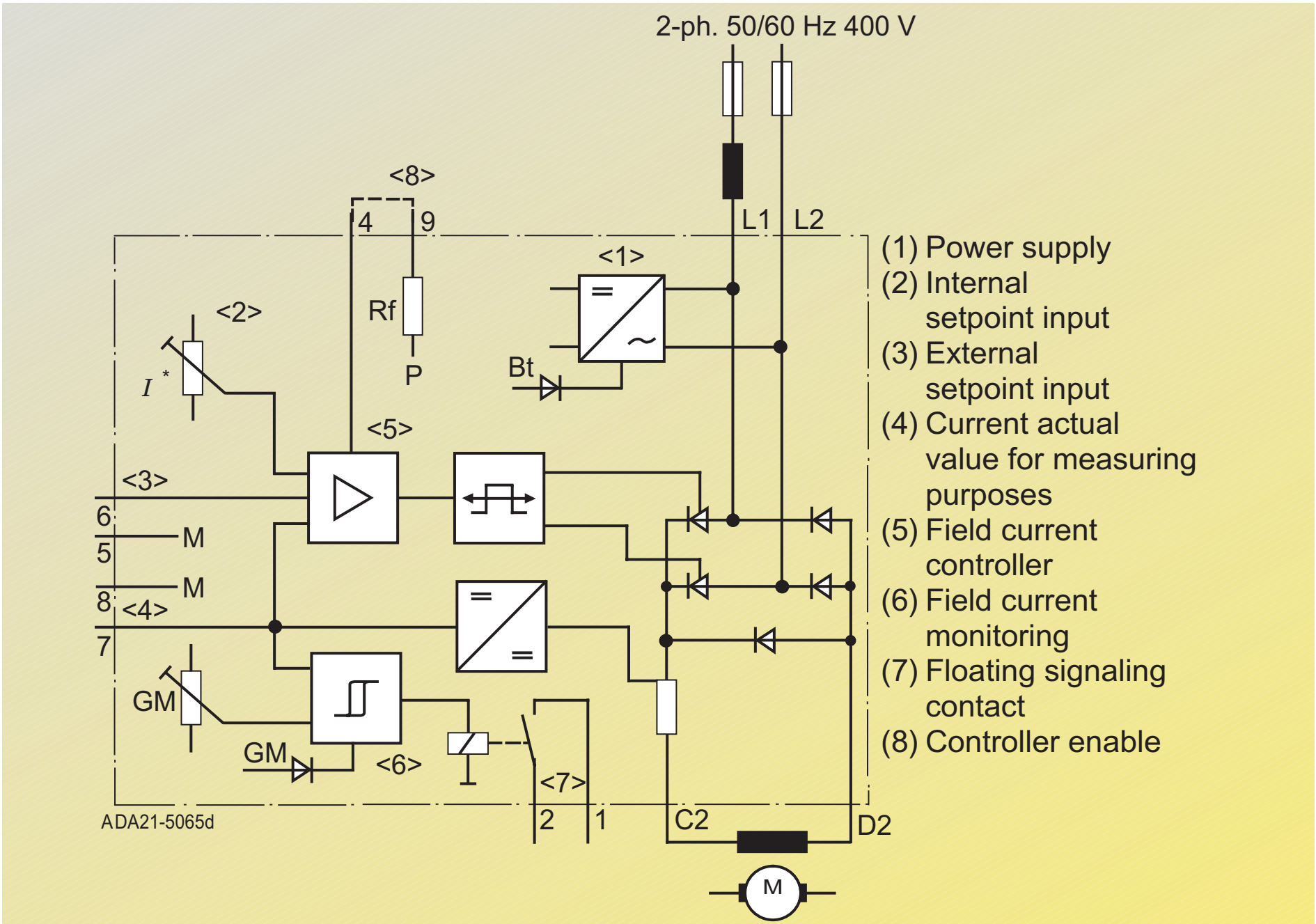
2-ph. 50/60 Hz 400 V
L1
L2
<8>
4
9
Rf
P
<1>
Bt
<2>
I *
<5>
<3>
6
5
M
8
M
<4>
7
GM
GM
<6>
<7>
2
1
C2
D2
M
ADA21-5065d
(1) Power supply
(2) Internal setpoint input
(3) External setpoint input
(4) Current actual value for measuring purposes
(5) Field current controller
(6) Field current monitoring
(7) Floating signaling contact
(8) Controller enable

Fig. 2/5