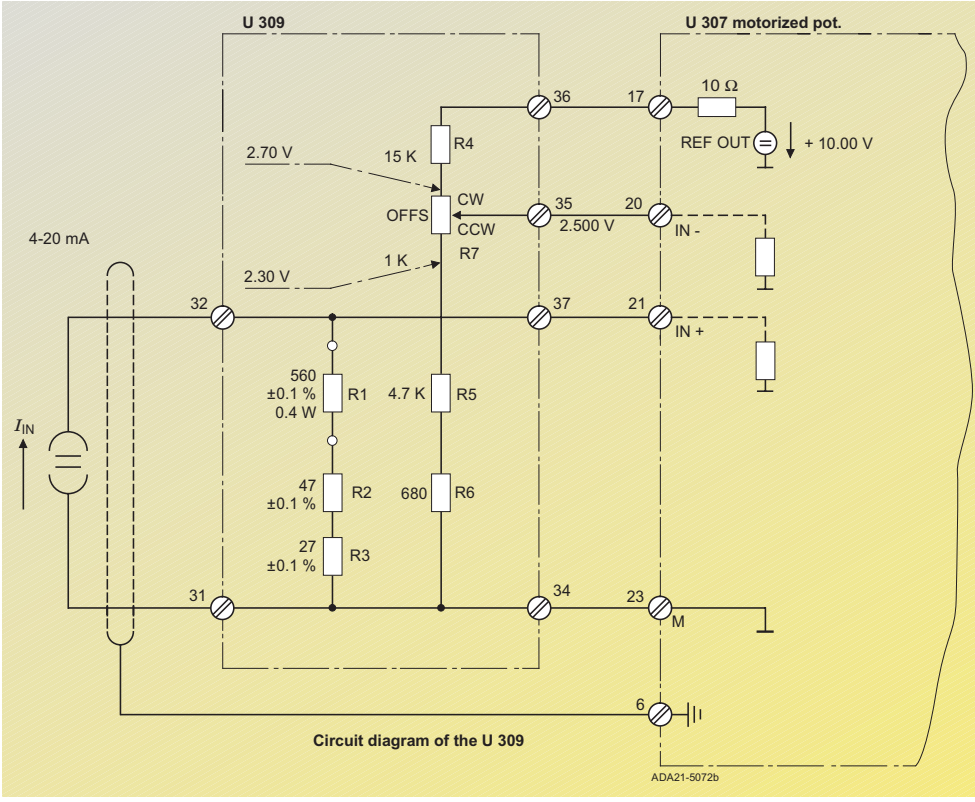
U 309
U 307 motorized pot.
10 Ω
REF OUT
+ 10.00 V
36
17
R4
15 K
2.70 V
CW
OFFS
CCW
R7
35
2.500 V
20
IN -
4-20 mA
1 K
2.30 V
32
37
21
IN +
560
±0.1 %
0.4 W
R1
4.7 K
R5
$I_{IN}$
47
±0.1 %
R2
680
R6
27
±0.1 %
R3
31
34
23
M
6
Circuit diagram of the U 309
ADA21-5072b

Fig. 3/8